REVISIONS						
ZONE	LTR	DESCRIPTION	CHANGE No	DATE	BY	APPR'D
	A	RELEASED FOR PRODUCTION	73283	17DEC10	RMB	CFH

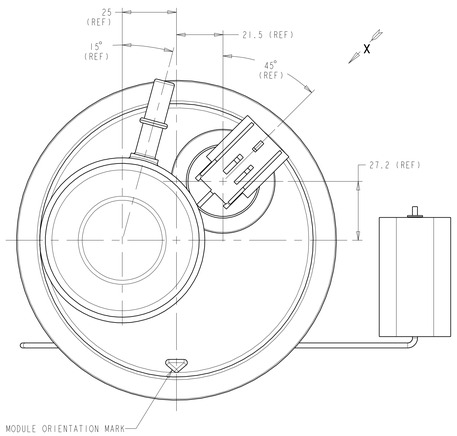

FRONT OF VEHICLE

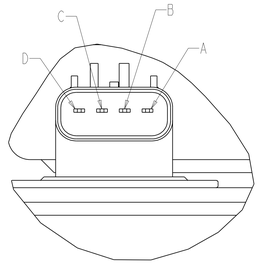

VIEW IN DIRECTION OF ARROW "X"
SCALE 2:1

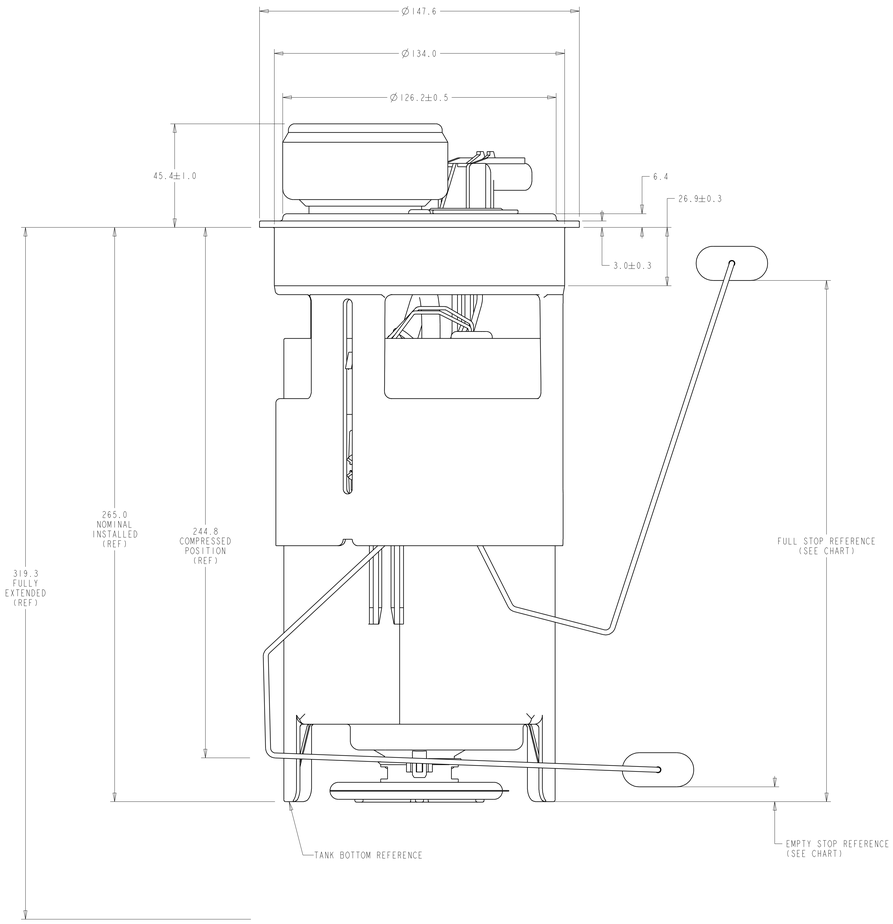

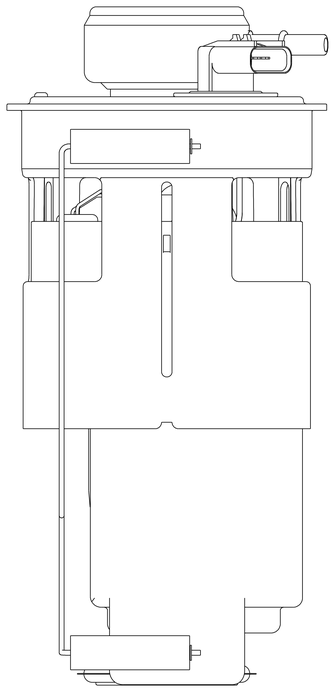

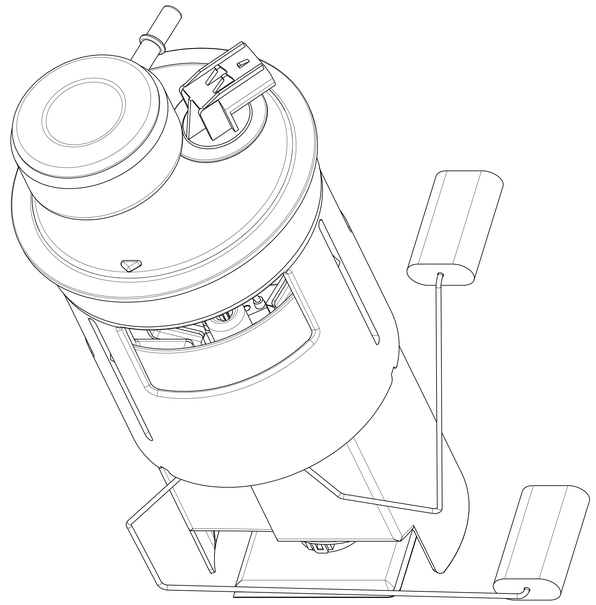

LEVEL UNIT				
RESISTANCE VS. FLOAT HEIGHT				
POINT	HEIGHT (mm) BASIC	RESISTANCE		
		NOMINAL	UPPER LIMIT	LOWER LIMIT
FS	228.9	20	26	14
FULL	212.8	38	44	32
EMPTY	18.7	206	212	200
ES	7.7	220	226	214

CONNECTOR WIRING			
LOCATION	FUNCTION	COLOR	WIRE GAUGE MINIMUM
A	PUMP +	RED	14
B	SENSOR SIGNAL	YELLOW	20
C	SENSOR GROUND	GREEN	20
D	PUMP GROUND	BLACK	14

NOTES:

1. REPLACES SERVICE #52102803AA.
2. SPECIAL CUSTOMER PACKAGING REQUIREMENTS MAY CALL FOR THE ADDITION OF SPECIFIC LABELS NOT SHOWN ON THIS DRAWING.
3. MODULE TO BE PACKAGED USING COMPONENTS NOTED ON BOM SO THAT CONTAMINATION FROM FOREIGN MATERIAL IS PREVENTED:
   - PLUG PROTECTORS ON PORTS
   - POLY BAG
4. SHOWN WIRE ROUTING MAY DIFFER FROM FINISHED PRODUCT.

- TI AUTOMOTIVE CONFIDENTIAL AND PROPRIETARY -
THIS DRAWING IS PROPERTY OF TI AUTOMOTIVE. TI AUTOMOTIVE CLAIMS PROPRIETARY RIGHTS IN THE INFORMATION HEREIN AND MAKES IT AVAILABLE TO YOU SUBJECT TO THE FOLLOWING LEGAL LIMITATIONS OF PROPERTY RIGHTS: THE DRAWING IS PROVIDED FOR REFERENCE PURPOSES ONLY AND ON THE EXPRESS CONDITION THAT IT WILL BE KEPT IN CONFIDENCE. THIS DRAWING SHALL NOT BE DISCLOSED TO ANYONE OTHER THAN YOUR EMPLOYEES WITHOUT THE PRIOR WRITTEN CONSENT OF TI AUTOMOTIVE, NOR SHALL ARTICLE OR PART SHOWN WITHOUT TI AUTOMOTIVE'S EXPRESS WRITTEN CONSENT, NOTE LICENSE OR OTHER RIGHT IS GIVEN OR IMPLIED BY THE PROVISION OF THIS DRAWING TO RECIPIENT.
COPYRIGHT, TI AUTOMOTIVE, 2010. ALL RIGHTS RESERVED.

METRIC
ALL DIMENSIONS ARE IN MILLIMETERS

DO NOT SCALE
DECIMAL TOLERANCES UNLESS OTHERWISE SPECIFIED
ONE PLACE ±0.25 TWO PLACE ±0.13 ANGLES ±1°

THIRD ANGLE PROJECTION
DIMENSIONS IN ACCORDANCE WITH ASME Y14.5 - 2009

TI Automotive
630 COLUMBIA ST.
CARO, MI 48723
+1 989.673.7727

ENGINEER	C.HOCKMAN	17DEC2010	MATERIAL/SPECIFICATION: N/A
DES.MANAGER			
DESIGNER	R.BRUBAKER	17DEC2010	
CAD SYSTEM: PRO/E	SCALE: 1:1	SHEET NO. 1 OF 1	
REFERENCE (D/REV.): FM0000717		PLM REFERENCE/REV.: CAD DWG: AR0027259/AA	
REFERENCE (D/REV.): 00010150O/AA		PLM REFERENCE/REV.: CAD ASM: AR0027313/AA	
DRAWING NAME: FUEL MODULE ASM-AFTMKT,AB-VAN,31 GAL			
SIZE: A0	DRAWING NO./REV.: TU149 / REV A		